KWP2000 Flasher (Clon)

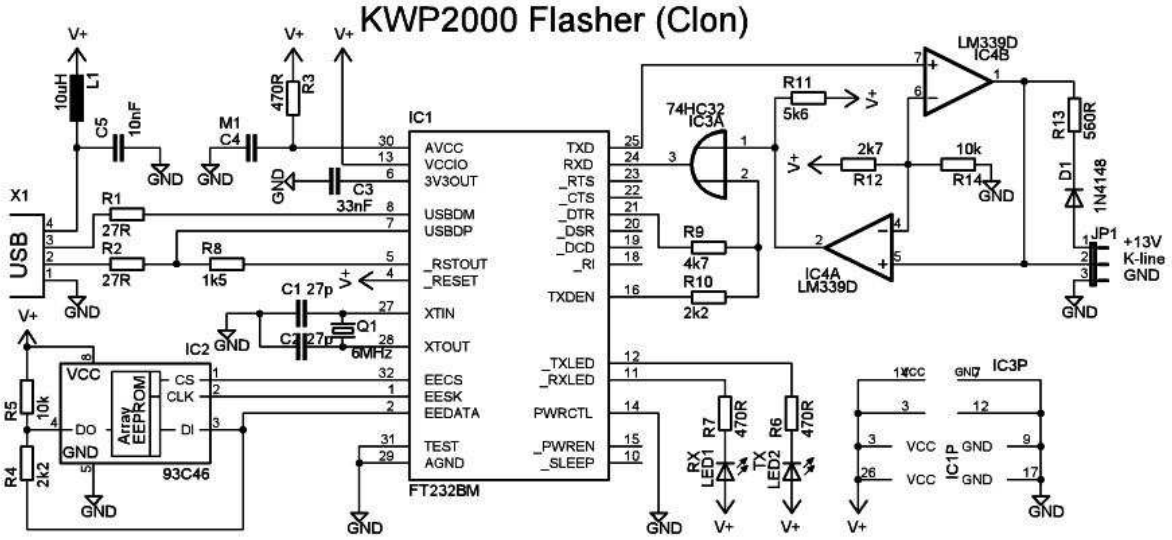

EDC16 Flasher (Clon)

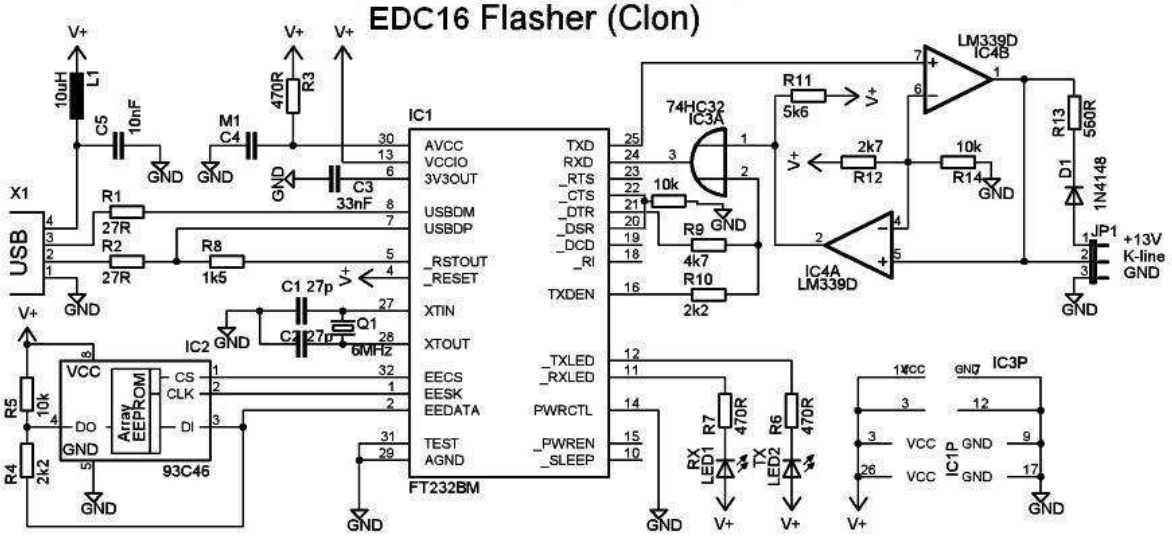

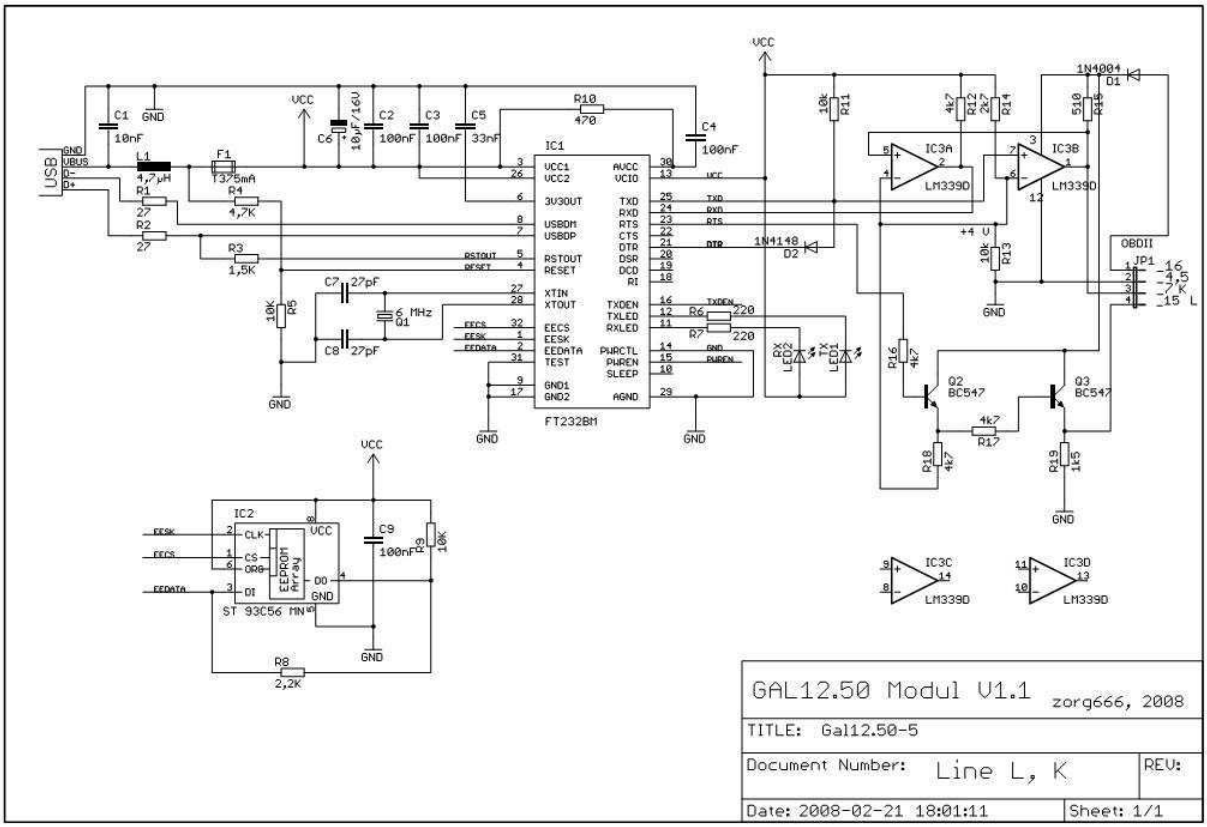

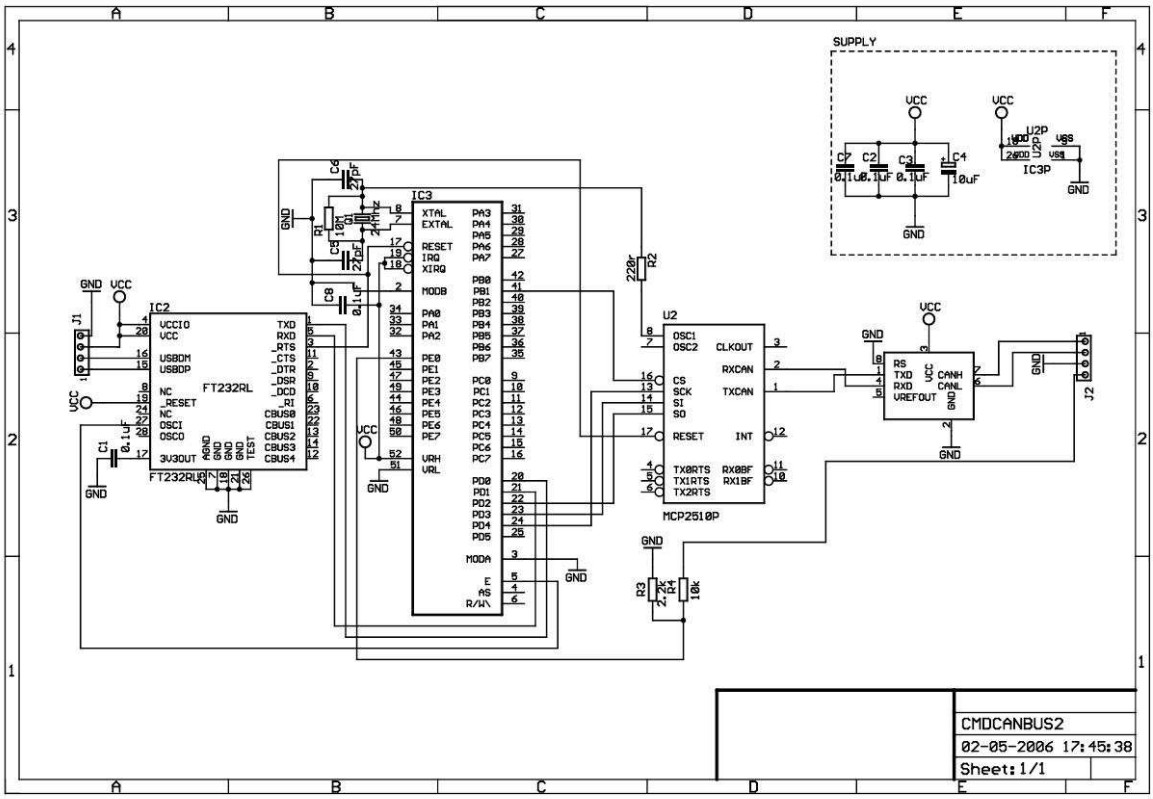

www.reprog.fr